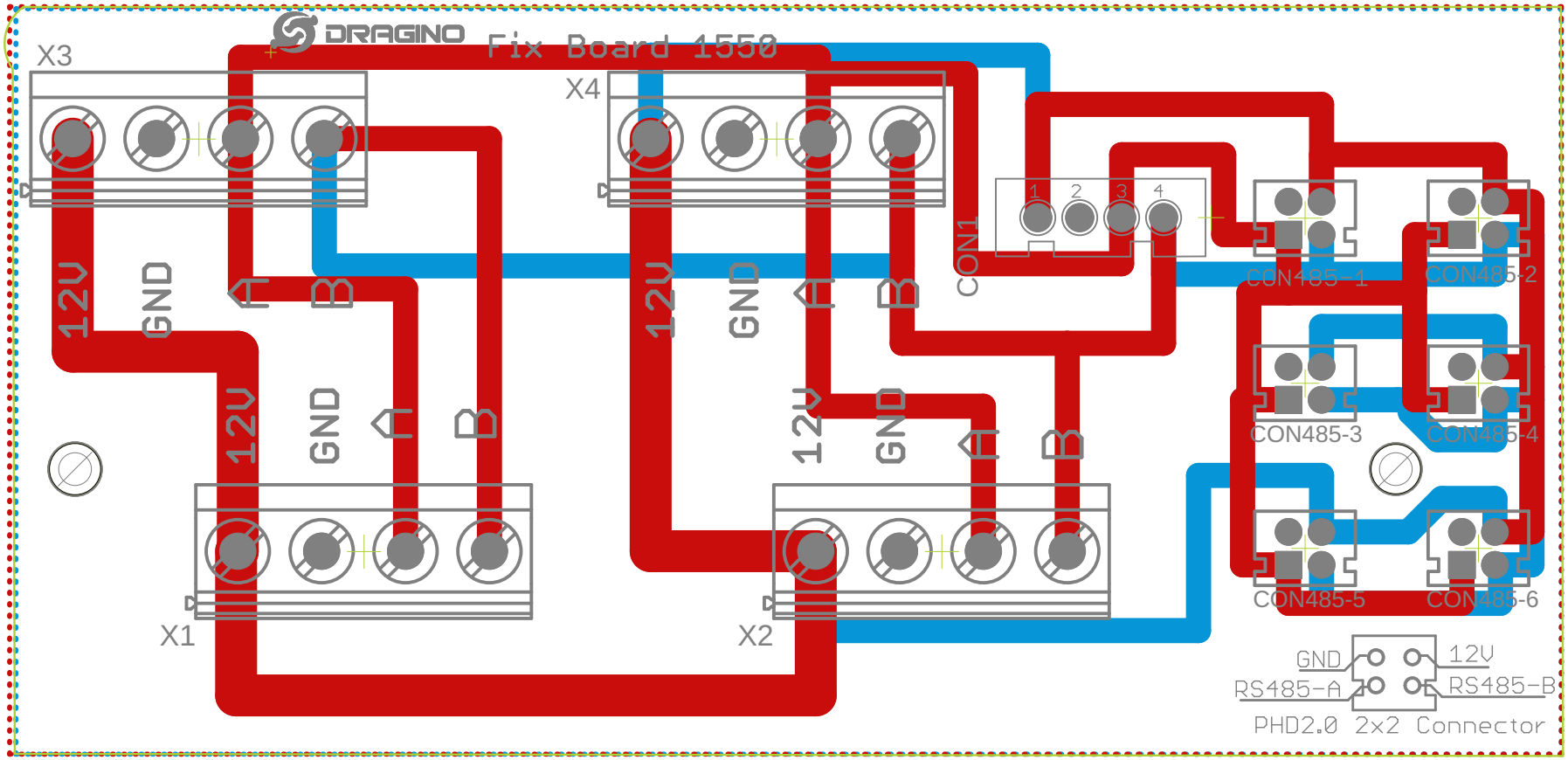

2022/3/16 14:58 f=2.50 D:\Projects\LoRa Product Line\LSN50\配件\Hardware\气象站WSC1-L 配件\气象站底板\Fix_Board_1550 v1.1\Fix_Board_1550 v1.1.brd